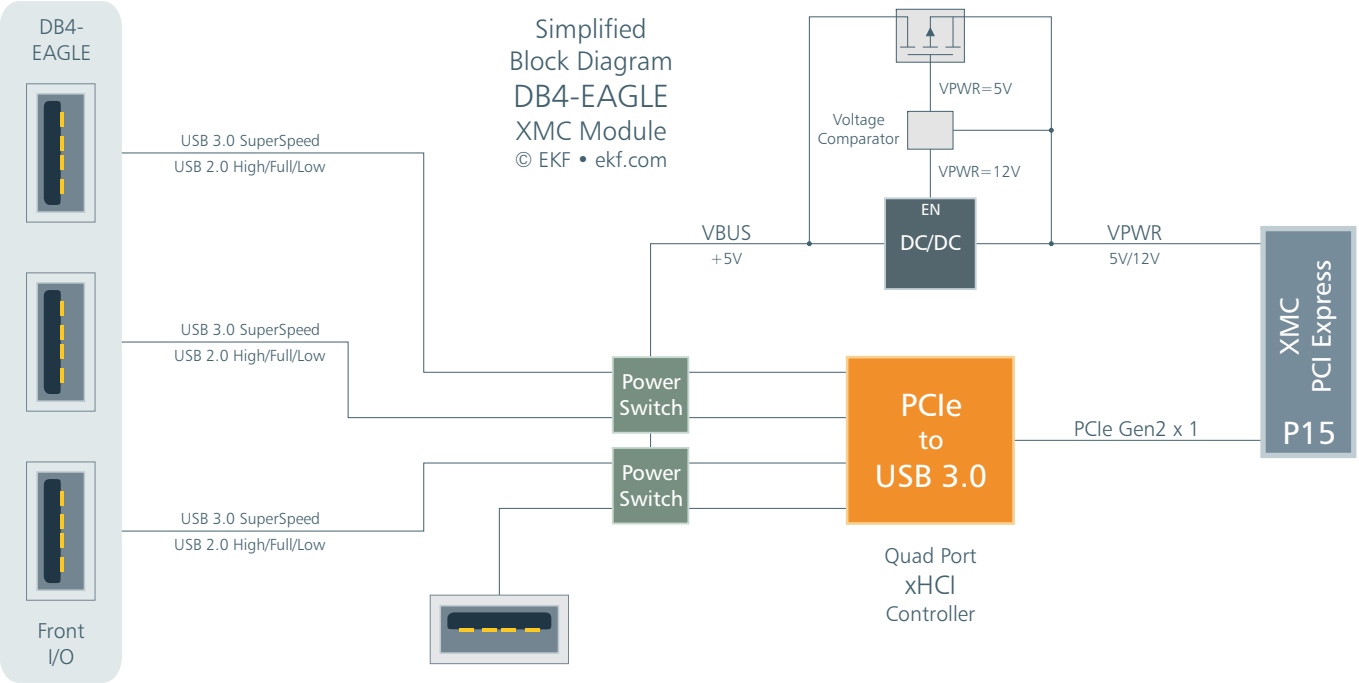
DB4-
EAGLE
Front
I/O
Simplified
Block Diagram
DB4-EAGLE
XMC Module
© EKF • ekf.com
USB 3.0 SuperSpeed
USB 2.0 High/Full/Low
USB 3.0 SuperSpeed
USB 2.0 High/Full/Low
USB 3.0 SuperSpeed
USB 2.0 High/Full/Low
Power
Switch
Power
Switch
VBUS
+5V
Voltage
Comparator
VPWR=5V
VPWR=12V
EN
DC/DC
VPWR
5V/12V
PCIe
to
USB 3.0
Quad Port
xHCI
Controller
PCIe Gen2 x 1
XMC
PCI Express
P15